Zennio®
Secure KNX-IP Interface

KIPI SC v2

ZSYKISCV2 **TECHNICAL DOCUMENTATION**

FEATURES

- KNXnet/IP tunnelling protocol (up to 5 connections)
- Maximal APDU length of 254 bytes
- NTP clock functionality
- Ethernet 10/100 BaseT IP with RJ45 socket
- Auxiliary power supply is not required
- Supports KNX Data Secure and KNX IP Secure
- Integrated KNX BCU (TP1-256)
- Dimensions 67 x 90 x 36 mm (2 DIN units)
- DIN rail mounting according to IEC 60715 TH35, with fixing clamp
- Conformity with the CE, UKCA, RCM directives (marks on the side)

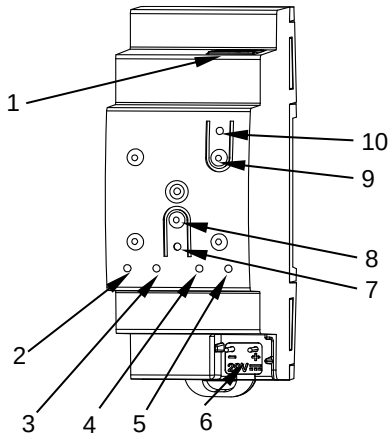

Figure 1: KIPI SC v2

1. Ethernet connection with LED indicators	2. KNX LED indicator	3. Ethernet LED indicator	4. Not used	5. Not used
6. KNX connector	7. Programming LED	8. Programming button	9. IP Factory Reset button	10. IP Factory Reset LED indicator

Programming button: short press to set programming mode. If this button is held while plugging the device into the KNX bus, it enters the safe mode. In order to perform a KNX Secure factory reset, while the device is in safe mode, press the button for 10 seconds until the programming LED changes its state.
IP Factory Reset button: long press (3 s) to perform a IP Factory Reset (associated LED lights red while button is pressed).

Programming LED: programming mode indicator (red). When the device enters the safe mode, it blinks (red) every half second. During the start-up (reset or after KNX bus failure) and if the device is not in safe mode, it emits a red flash.
KNX indicator LED: shows that the device is powered through the KNX bus (green color).
Ethernet indicator LED: shows that the device is connected to Ethernet and has an IP address assigned (green color).
IP Factory Reset indicator LED: shows that the device has just executed a IP Factory Reset (red color).
Ethernet connector LEDs: shows that data is being transferred (yellow blinking) and that there is an established connection (green color).

GENERAL SPECIFICATIONS

CONCEPT			DESCRIPTION	
Type of device			Electric operation control device	
KNX supply	Voltage (typical)		29 VDC SELV	
	Voltage range		21-31 VDC	
	Maximum consumption	Voltage	mA	mW
		29 VDC (typical)	17.5	507.5
		24 VDC[1]	22.5	540
	Connection type		Typical TP1 bus connector for 0.8 mm Ø rigid cable	
External power supply			Not required	
Operation temperature			0 .. +55 °C	
Storage temperature			-20 .. +55 °C	
Operation humidity			5 .. 95%	
Storage humidity			5 .. 95%	
Complementary characteristics			Class B	
Protection class			III	
Operation type			Continuous operation	
Device action type			Type 1	
Electrical stress period			Long	
Degree of protection			IP20, clean environment	
Installation			Independent device to be mounted inside electrical panels with DIN rail (IEC 60715)	
Minimum clearances			Not required	
Response on KNX bus failure			Data saving	
Response on KNX bus restart			Data recovery	
Operation indicator			The programming LED indicates programming mode (red). The KNX LED indicates the bus connection (green). The Ethernet LED indicates the Ethernet connection with an IP assigned (green). The Factory Reset LED indicates the execution of an IP factory reset (red).	
Weight			96 g	
PCB CTI index			175 V	
Housing material			PC FR V0 halogen free	

[1] Maximum consumption in the worst-case scenario (KNX Fan-In model).

Attaching KIPI SC v2 to DIN rail:

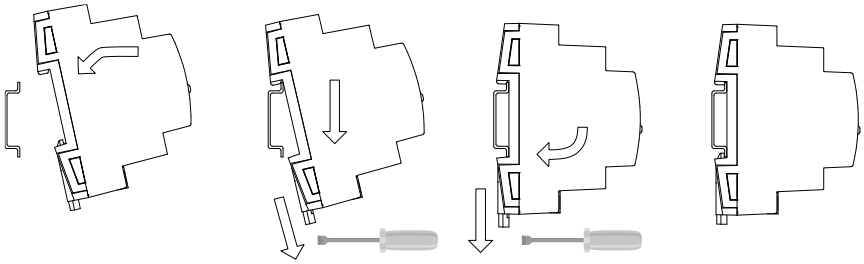

Removing KIPI SC v2 from DIN rail:

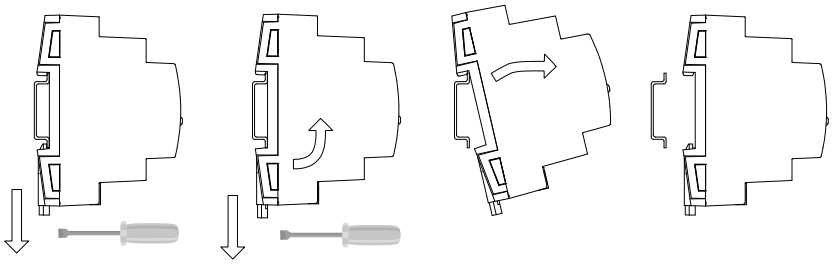

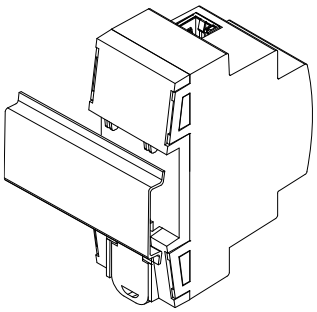

Figure 2: Mounting KIPI SC v2 on DIN rail

SAFETY INSTRUCTIONS AND ADDITIONAL NOTES

- Installation should only be performed by qualified professionals according to the laws and regulations applicable in each country.
- Do not connect the mains voltage nor any other external voltage to any point of the KNX bus; it would represent a risk for the entire KNX system. The facility must have enough insulation between the mains (or auxiliary) voltage and the KNX bus or the wires of other accessories, in case of being installed.
- Once the device is installed (in the panel or box), it must not be accessible from outside.
- Keep the device away from water (condensation over the device included) and do not cover it with clothes, paper or any other material while in use.
- The WEEE logo means that this device contains electronic parts and it must be properly disposed of by following the instructions at https://www.zennio.com/en/legal/weee-regulation.
- This device contains software subject to specific licences. For details, please refer to https://zennio.com/licenses.